Week 12 Assignment Solution

By: *Roopesh O R*

Problem 1

The corrected circuit is as following:

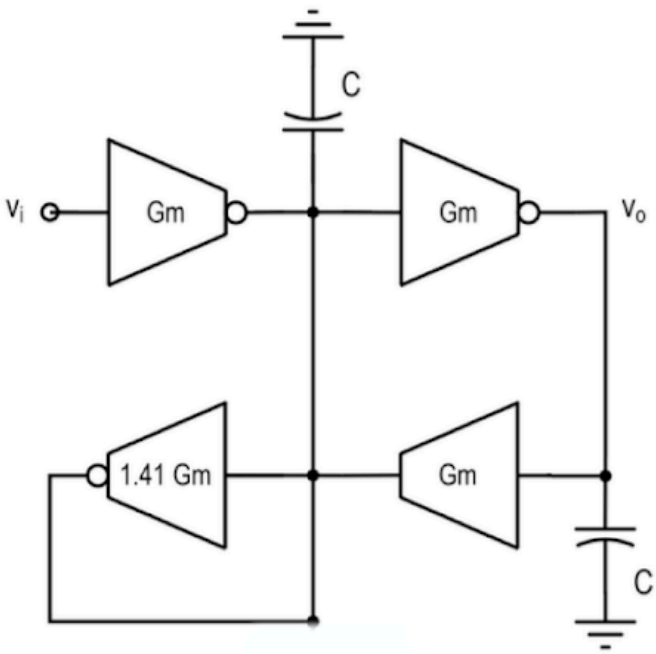

Here the require −3dB frequency is 1MHz ($\omega_c = 2\pi \times 10^6$). To obtain that the value of capacitor must be:

$$C = \frac{g_1}{\omega_c} = \frac{10^{-4}}{2\pi 10^6} \approx 15.9\text{pF}$$

Finding 3rd harmonic:

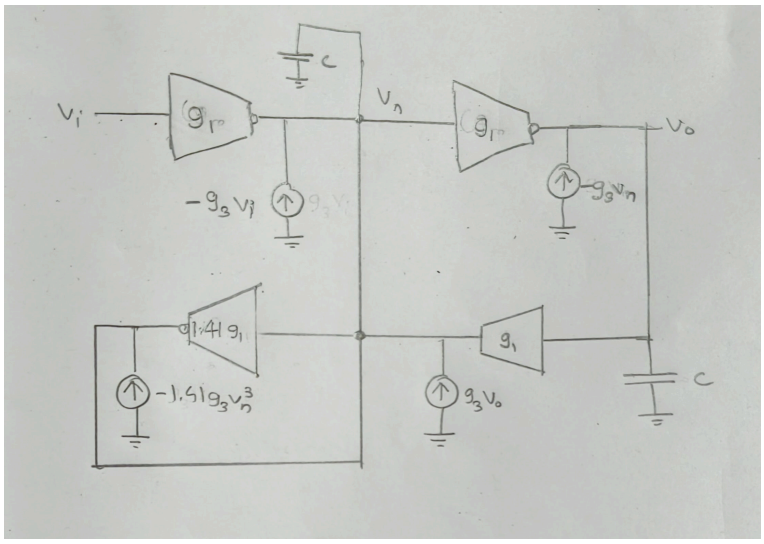

the Transfer function from input to output is:

$$H(s) = \frac{\frac{g_1^2}{C^2}}{s^2 + 1.41\frac{g_1}{C}s + \frac{g_1^2}{C^2}}$$

if we define $\Omega = \frac{\omega}{\omega_n}$, the linear nodal voltages are:
- $V_{o(\omega)} = H(j\omega)$
- $V_{n(\omega)} = -j\Omega H(j\omega)$ (derived from the output node KCL: $sCV_o = -g_1 V_n$)

For an OTA with $G_{m(v)} = g_1 v + g_3 v^3$, a voltage $v(t) = |V|\cos(\omega t + \phi)$ generates a 3rd harmonic current phasor of $I_3 = g_3 V^3$.

To calculate the third harmonic distortion using current injection, the 3rd harmonic current injected into nodes V_n and V_o are added from OTAs:

- Into Node V_n (from Input OTA): $-g_3 V_i^3$
- Into Node V_n (from 1.41 Damping OTA): $1.41 g_3 V_n^3$
- Into Node V_n (from Feedback OTA): $g_3 V_o^3$
- Into Node V_o (from Top OTA): $-g_3 V_n^3$

Summing these gives the total injected current phasors at 3ω:

$$I_{\text{in1}} = g_3[-V_i^3 - 1.41 V_n^3 + V_o^3]$$

$$I_{\text{ino}} = -g_3 V_1^3$$

When external input is turned off ($V_i = 0$) and applying these current sources to the linear circuit. The KCL equation at 3rd harmonic frequency is:

$$(sC + 1.41 g_1)V_{\text{o3,1}} - g_1 V_o^3 = I_{\text{in1}}$$

$$sCV_{\text{o3}} + g_1 V_o^3, 1 = I_{\text{ino}}$$

Solving this yields:

$$\begin{aligned} V_{\text{o3}} &= \frac{(sC + 1.41 g_1)I_{\text{ino}} - g_1 I_{\text{in1}}}{s^2 C^2 + 1.41 g_1 sC + g_1^2} \\ &= \frac{H(jw)}{g_1^2}[(sC + 1.41 g_1)I_{\text{ino}} - g_1 I_{\text{in1}}] \end{aligned}$$

Substituing current terms and simplifying gives:

$$V_{\text{o3}} = \frac{H(jw)}{g_1^2}\left[\frac{1}{4} g_3 [V_i^3 - sCV_n^3 - g_1 V_o^3]\right]$$

if we let $V_i = 1, V_o = H(j\omega), V_n = -j\Omega H(j\omega)$:

$$V_{\text{o3}} = \frac{1}{4}\frac{g_3}{g_1} H(jw)[1 + (3\Omega^4 - 1)H(jw)^3]$$

∴ Amplitude of 3rd harmonic is:

$$\boxed{V_{\text{o3}} = \frac{1}{4}\,|\frac{g_3}{g_1}|\;|H(jw)|\;|1 + (3\Omega^4 - 1)H(jw)^3|}$$

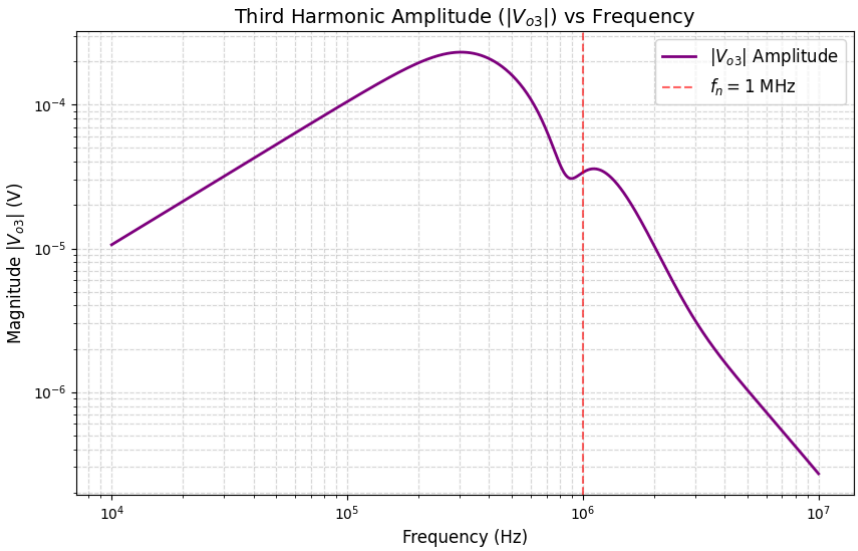

Simulation

Here i made 2 copy of circuit one without having 3rd harmonic distortions. Then Substracted results from each output nodes and plotted them in single figure.

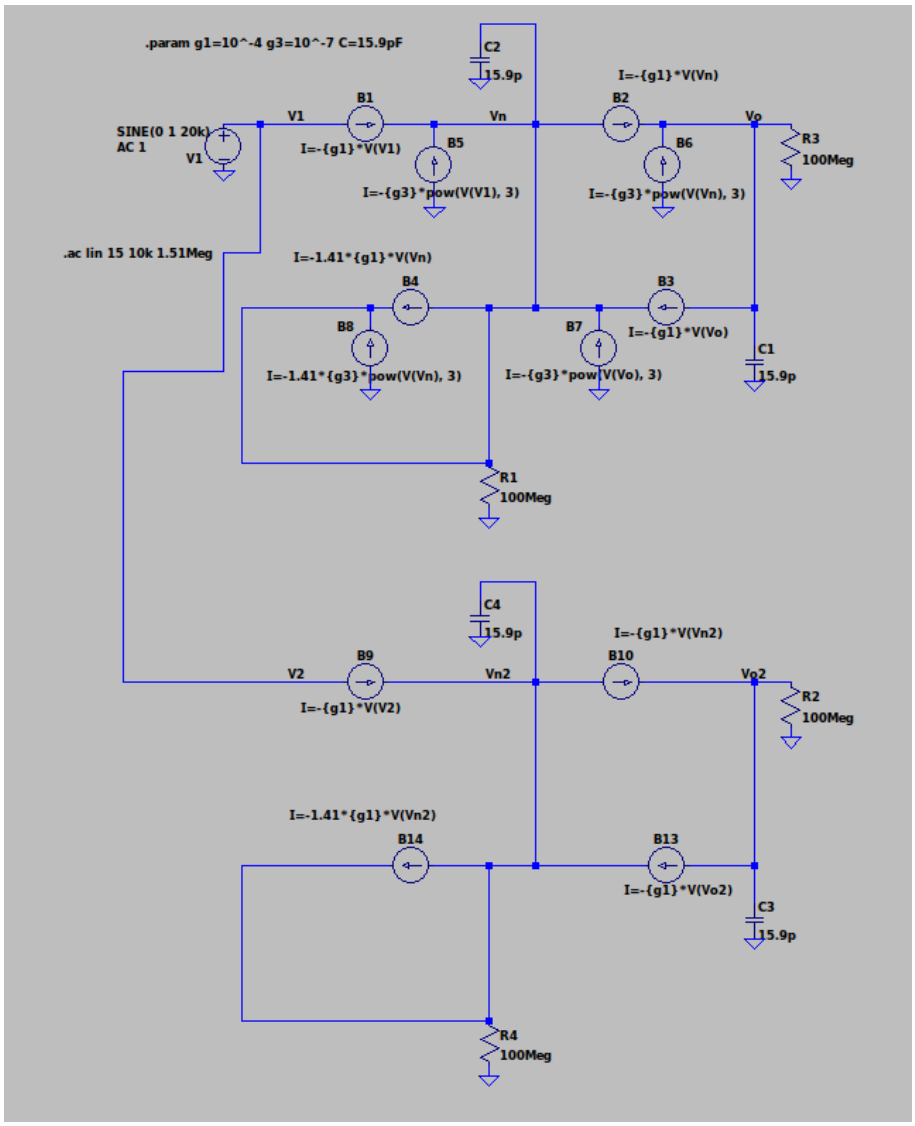

plots

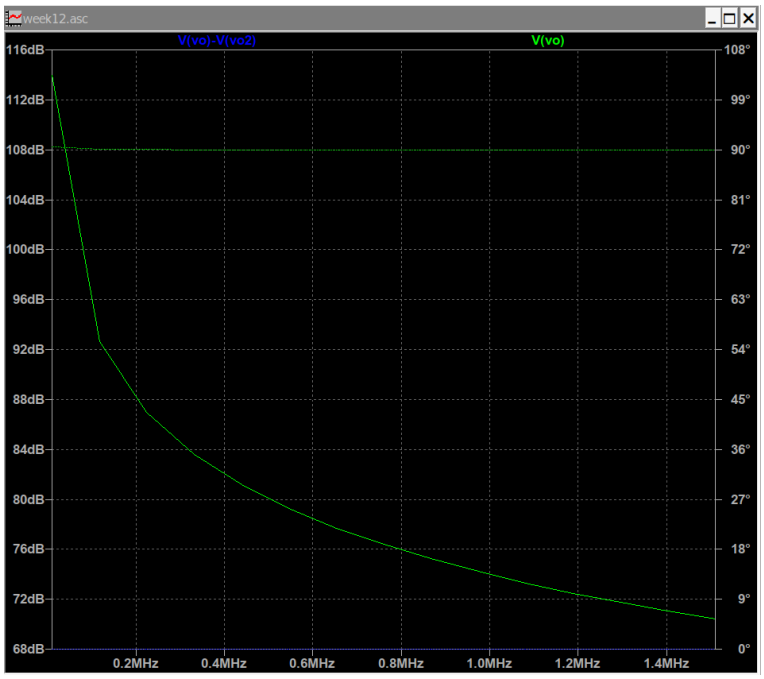
week12.asc
V(vo)-V(vo2)
V(vo)
116dB
112dB
108dB
104dB
100dB
96dB
92dB
88dB
84dB
80dB
76dB
72dB
68dB
108°
99°
90°
81°
72°
63°
54°
45°
36°
27°
18°
9°
0°
0.2MHz
0.4MHz
0.6MHz
0.8MHz
1.0MHz
1.2MHz
1.4MHz